CONFIDENTIAL

SONY

WITH STAND

Area		JAPAN	NORTH AMERICA	LATIN AMERICA	EUROPE	GENERAL AREA	CHINA
Model Name		KJ-65X8500F	XBR-65X850F	XBR-65X851F	KD-65XF8505	KD-65X8500F	KD-65X8500F
SV No.		SV-34319	SV-34066	SV-34333	SV-34288	SV-34151	SV-34258
DIMENSION	TV only (WxHxD)	145.0x83.6x5.2(1.41) cm	1450x836x52(14.1) mm / 57 1/8 x 33 x 2 1/8(9/16) inch	1450x836x52(14.1) mm	Approx. 145.0x83.6x5.2(1.41) cm	Approx. 1450x836x52(14.1) mm	Approx. 1450x836x52(14.1) mm
	TV with Stand (WxHxD)	145.0x90.0x31.5 cm	1450x900x315 mm / 57 1/8 x 35 1/2 x 12 1/2 inch	1450x900x315 mm	Approx. 145.0x90.0x31.5 cm	Approx. 1450x900x315 mm	Approx. 1450x900x315 mm
	Media Receiver (WxHxD)	-	-	-	-	-	-
	Monitor only (WxHxD)	-	-	-	-	-	-
	Monitor with Stand (WxHxD)	-	-	-	-	-	-
	Media Receiver with Stand (WxHxD)	-	-	-	-	-	-
	Satellite Speaker (WxHxD)	-	-	-	-	-	-
	Stand Width	112.4 cm	1124 mm / 44 3/8 inch	1124 mm	Approx. 112.4 cm	Approx. 1124 mm	Approx. 1124 mm
	VESA Hole Pitch	30.0x30.0 cm	300x300 mm / 11 7/8 x 11 7/8 inch	300x300 mm	30.0x30.0 cm	300x300 mm	300x300 mm
WEIGHT	TV Only	25.6 Kg	25.6 Kg / 56.4 lb	25.6 Kg	Approx. 25.6 Kg	Approx. 25.6 Kg	Approx. 25.6 Kg
	TV With Stand	26.5 Kg	26.5 Kg / 58.4 lb	26.5 Kg	Approx. 26.5 Kg	Approx. 26.5 Kg	Approx. 26.5 Kg
	Media Receiver	-	-	-	-	-	-
	Monitor Only	-	-	-	-	-	-
	Monitor With Stand	-	-	-	-	-	-
	Media Receiver with Stand	-	-	-	-	-	-
	Satellite Speaker	-	-	-	-	-	-
Remarks							

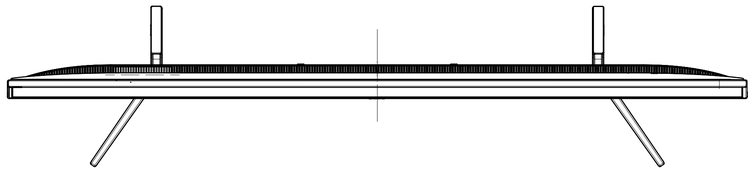

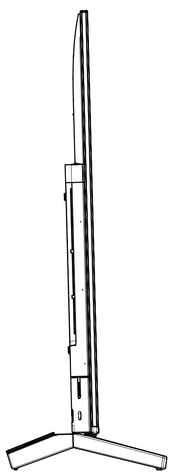

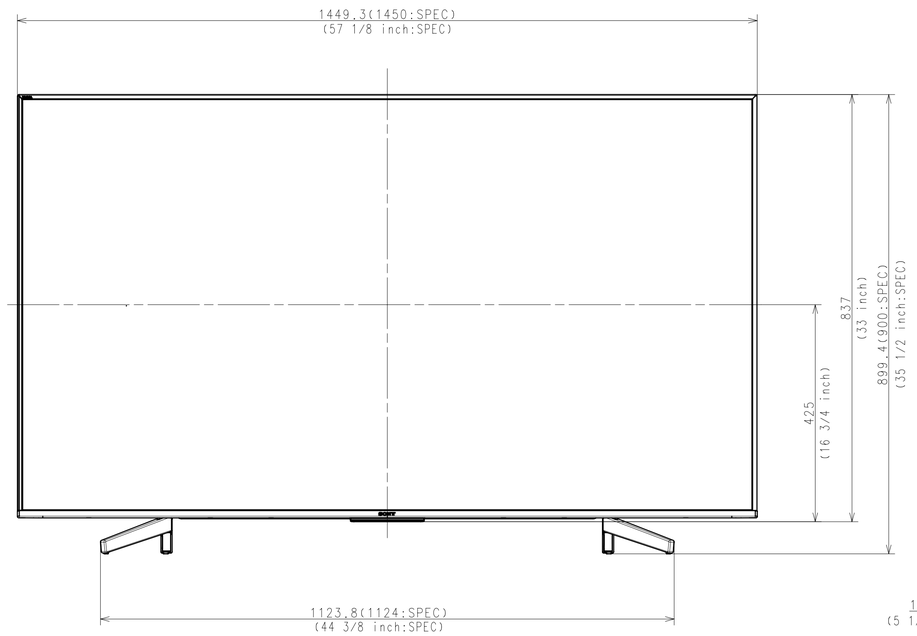

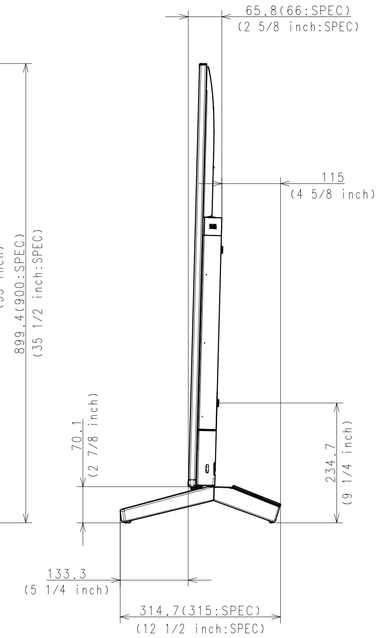

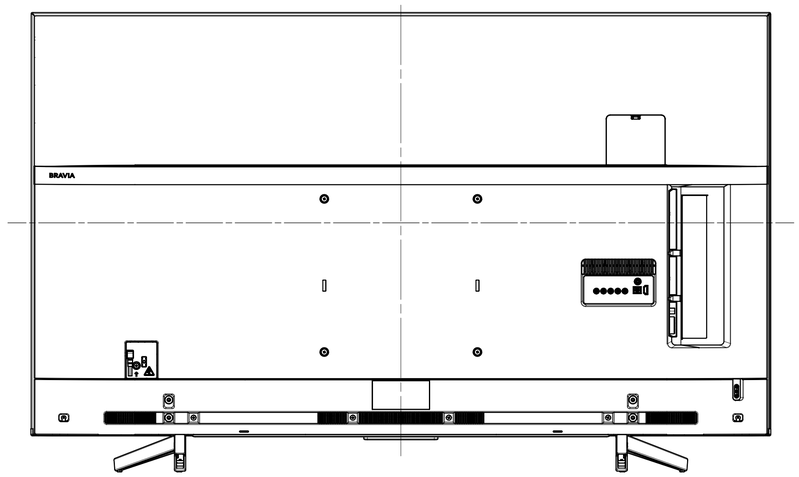

Purchase recycled resins and wire rods only from the business partners that Sony approves as Green Partners.
再生樹脂・被覆電線はグリーンパートナー認定取引先から調達すること。

HISTORY M COUNT	SUFFIX /REFL.	RELEASE NO. / DATE	REVISION	SIGN.
A				
A				
A				

GENERAL TOLERANCE

DATE OF ISSUE: 2017.10.31

DOCUMENT TYPE: PART DRAWING

TOLERANCING: ISO 8015

MATERIAL(COLOR)

FINISH(COLOR)

LEGAL OWNER: Sony Corporation

RESPONSIBLE DEPARTMENT: SVP TV B Div PD Dept.3

SIZE: A1 UNIT: mm

ORIGINAL MODEL

DESCRIPTION(E): 65 (X8500F) EXTERIOR VIEW

PLANNED BY: 2017.10.31 S.Fukuda

CHECKED BY

APPROVED BY

SCALE: 1:6

TENTATIVE MODEL

DESCRIPTION(J): 65 (X8500F) EXTERIOR VIEW

DRAWN BY: 2017.10.31 S.Fukuda

PRJ. METHOD

TENTATIVE PART NO.

PART NO.

SHEET/PAGES: 1/ 3

THIS DOCUMENT IS THE PROPRIETARY PROPERTY OF SONY. THIS USE IS AUTHORIZED ONLY FOR A REVISION OR A REQUEST FOR QUOTATION, OR FOR THE PERFORMANCE OF WORK FOR SONY. ALL QUESTIONS MUST BE REFERRED TO THE LOCAL PURCHASING DEPARTMENT OF SONY. THIS PART SHOULD NOT CONTAIN ANY TOLERANCES WHICH ARE SPECIFIED IN ISO-0024-01. THE REPRODUCTION, DISTRIBUTION AND UTILIZATION OF THIS DOCUMENT AS WELL AS THE COMMUNICATION OF ITS CONTENTS TO OTHERS WITHOUT EXPRESS AUTHORIZATION IS PROHIBITED. OFFENDERS WILL BE HELD LIABLE FOR THE PAYMENT OF DAMAGES. ALL RIGHTS RESERVED. IN THE EVENT OF THE GRANT OF A PATENT, UTILITY MODEL OR DESIGN, COPYRIGHT RESERVED.

A1
'15.12

0001-102529

F spec - D12

WITHOUT STAND

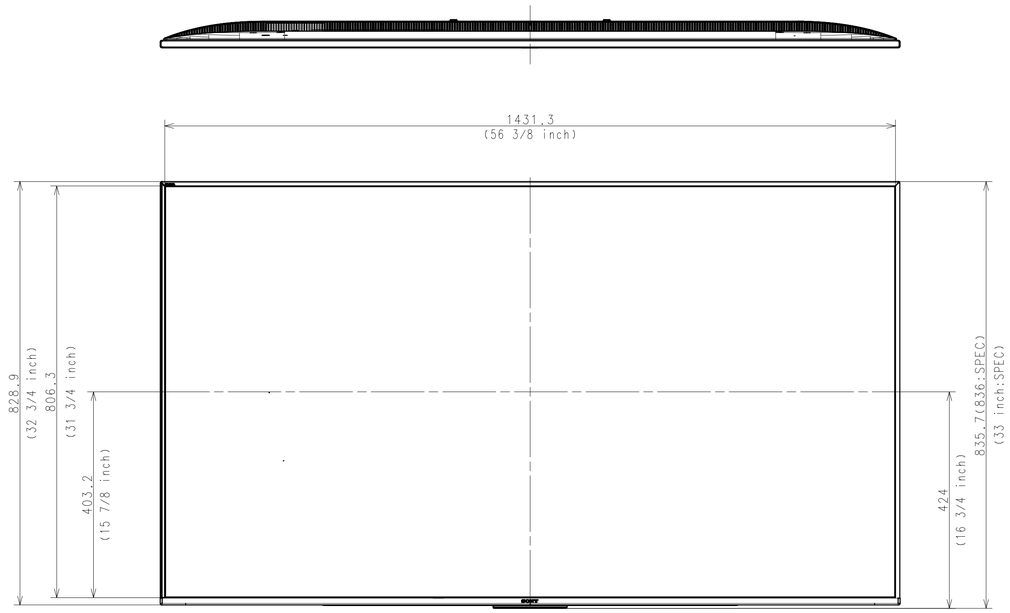

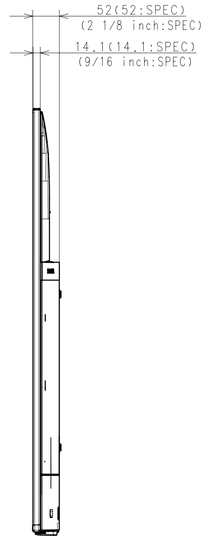

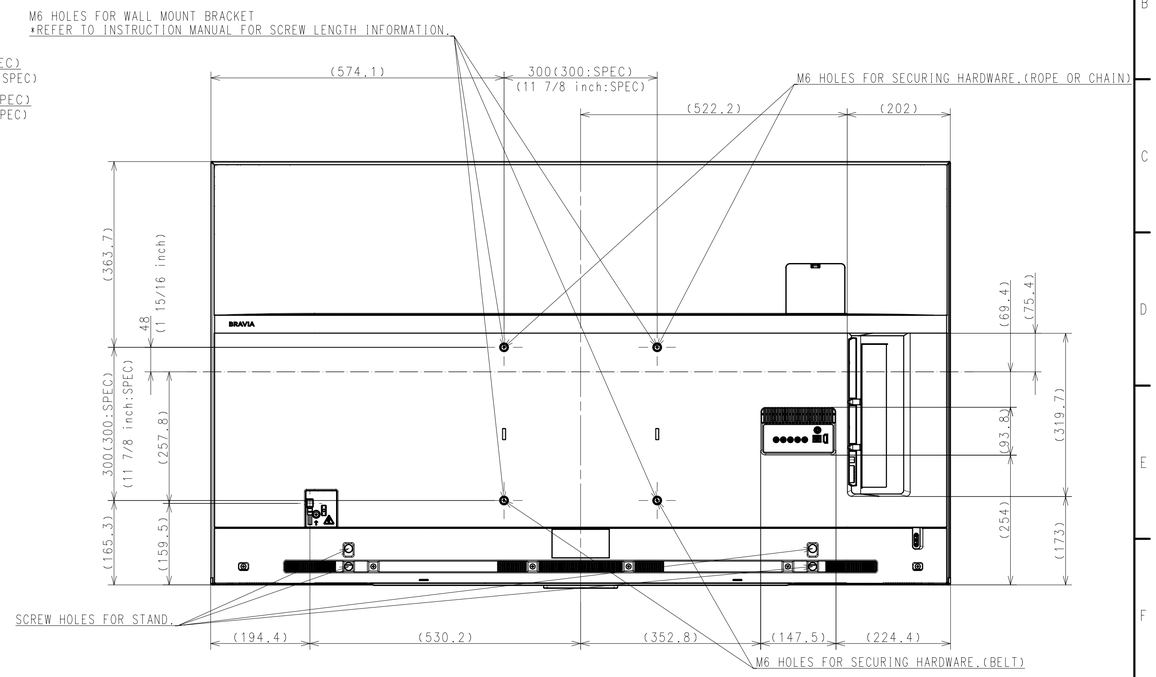

SU-WL450 SLIM

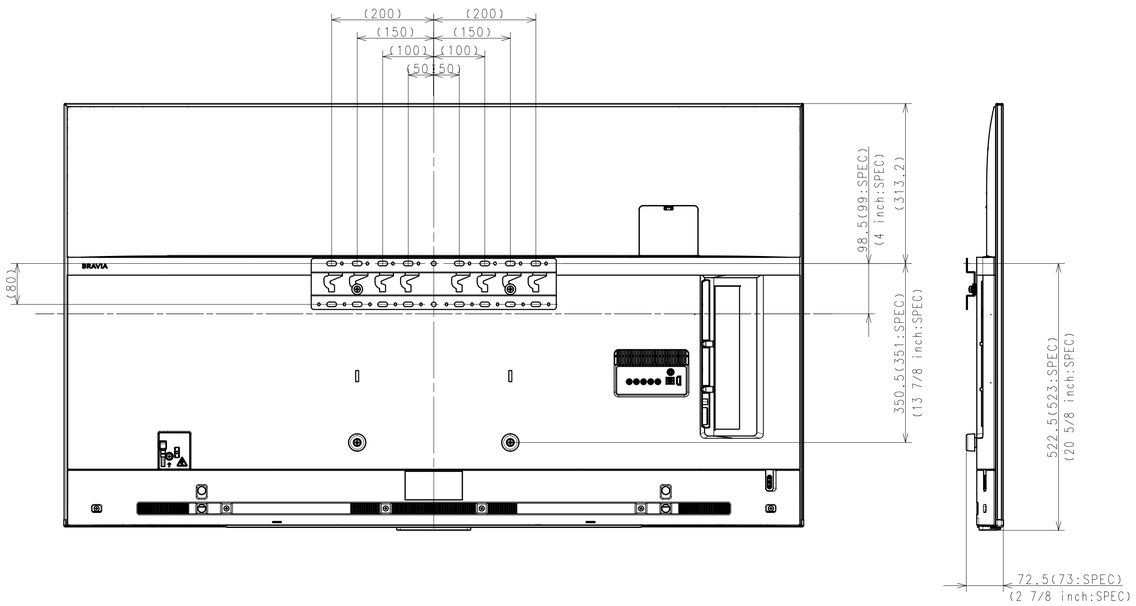

SU-WL450 STANDARD

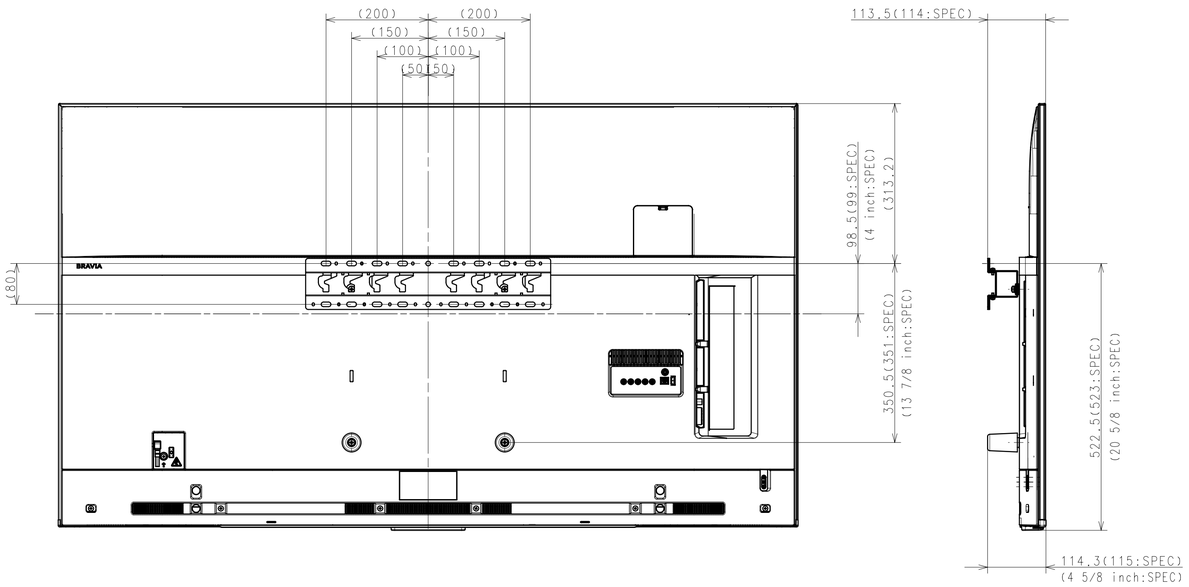

DESCRIPTION(E)	LEGAL OWNER		SCALE
65 (X8500F) EXTERIOR VIEW	Sony Corporation		1:6
DESCRIPTION(J)	TENTATIVE PART NO.	PART NO.	SHEET/PAGES
65 (X8500F) EXTERIOR VIEW			2/ 3

A1
'15.12

F spec - D17

SONY

SU-WL820

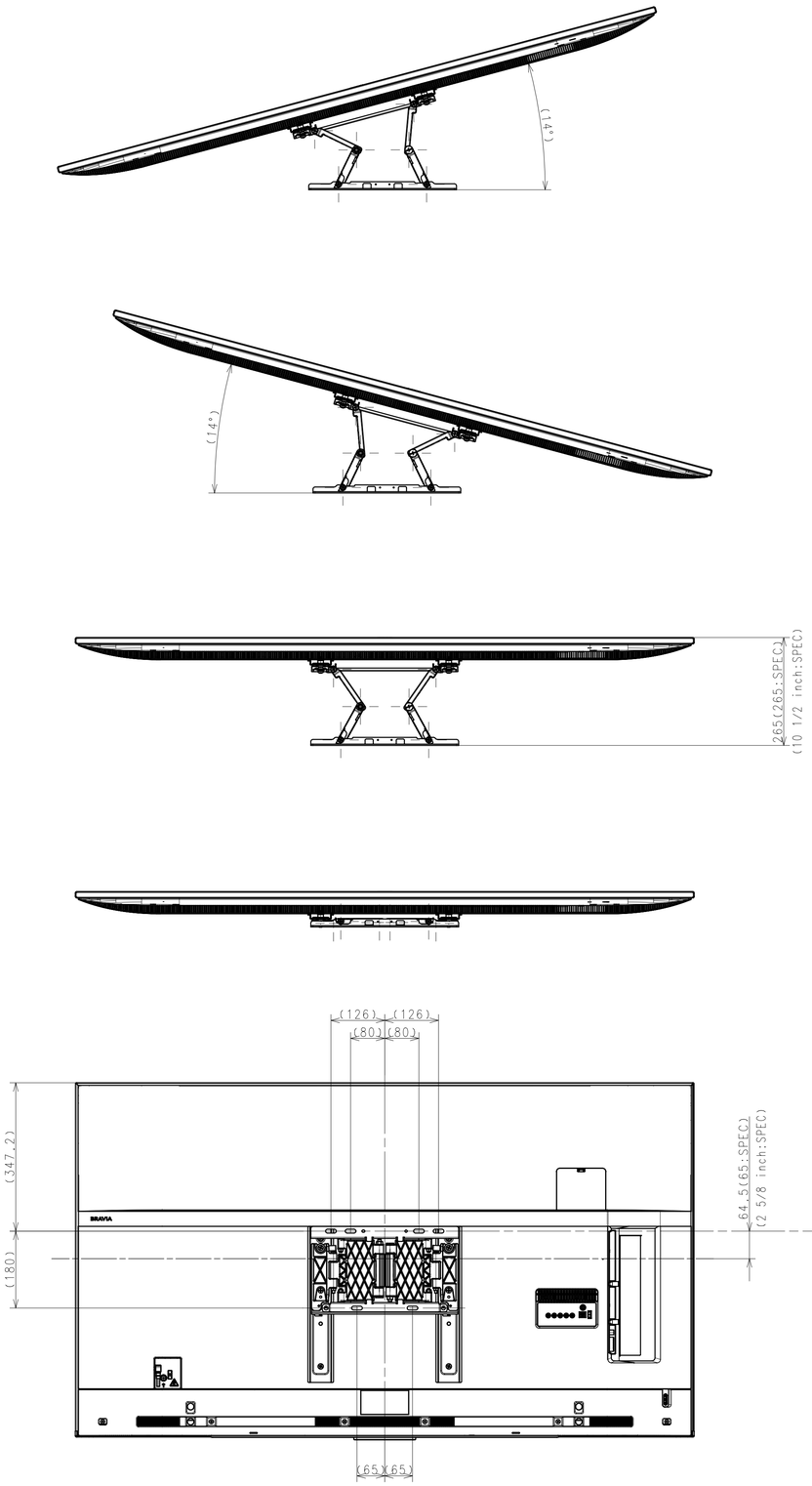

SU-WL820 with LATERAL SHAFT BRACKET

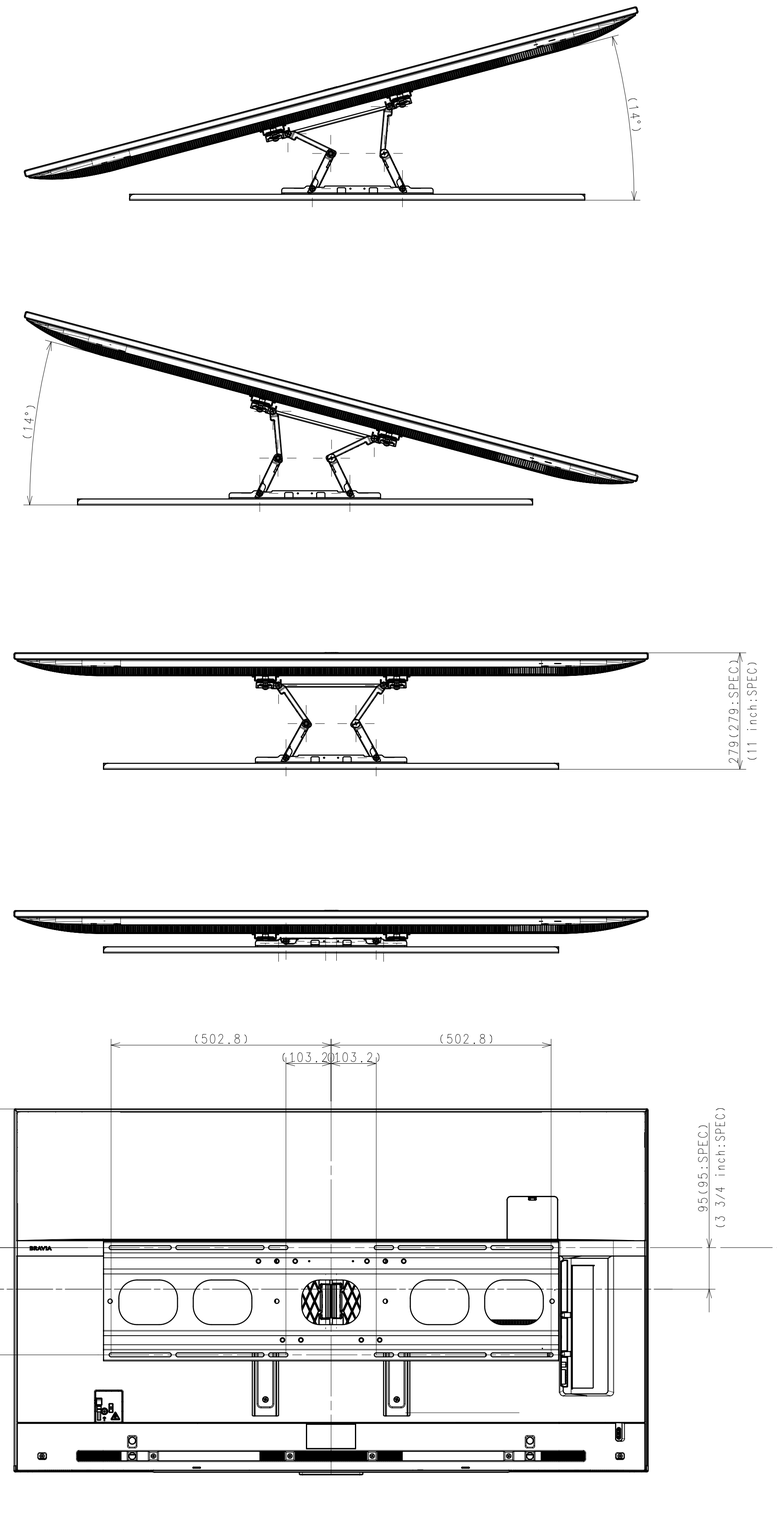

DESCRIPTION(E) 65 (X8500F) EXTERIOR VIEW	LEGAL OWNER Sony Corporation		SCALE 1:7
DESCRIPTION(J) 65 (X8500F) EXTERIOR VIEW	TENTATIVE PART NO.	PART NO.	SHEET/PAGES 3/ 3

A1
'15.12

F spec - D17